DoorHan®

General Information	2
Safety Instructions	3
Operator Unit	5
Operator Installation	6
Electrical Connections	9
Operator Programming	10
Manual Opening	17
Maintenance	17
Troubleshooting	18
Appendix	19

SECTIONAL-800PRO-CE
SECTIONAL-1000PRO-CE
Operator

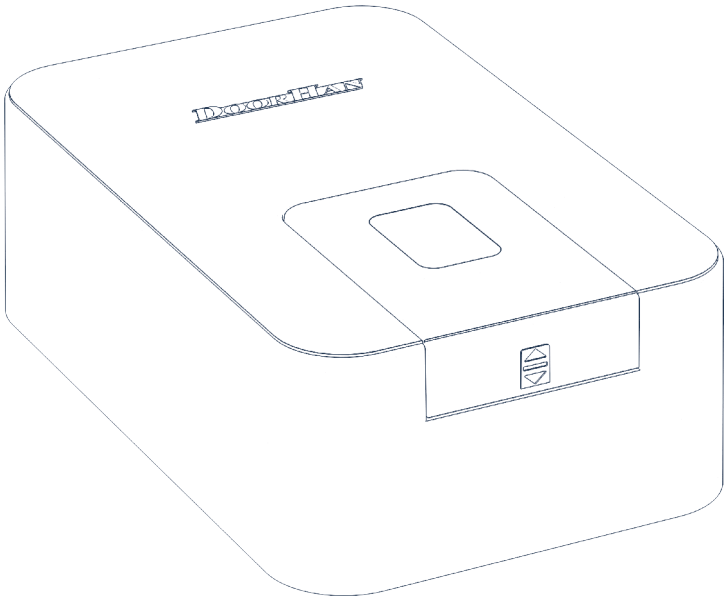

Installation and Operation Manual

Actual versions:
Soft — v 1.9

© DoorHan, 01.2022

1. GENERAL INFORMATION

Electromechanical chain operator Sectional-800PRO-CE / 1000PRO-CE is designed for automation of balanced sectional doors.

It consists of a mechanical gear and an electric engine with a built-in control unit. The gear and the electric engine are incorporated into one housing.

It consists of an electromechanical motor reducer, an electronic control unit and a lamp, incorporated into one housing.

The electric operator is easily secured on a track and mounted to the ceiling; opening of the door is carried out by means of a chain / belt gear. The self-locking operator gear ensures mechanical interlocking of the door, if the engine is not running. In case of power outage the manual emergency release allows you to operate the door manually.

For maximum safety, the control unit has force protection.

Besides, optionally, the operator can be equipped with electronic protective sensors, which stop the door movement, if there is an obstacle or a man within the operating range of the automatic system.

1.1. SPECIFICATIONS

Parameters	SECTIONAL-800PRO-CE	SECTIONAL-1000PRO-CE
Power supply	220–240 V	
Consumed power	150 W	250 W
Waiting mode	max 6 W	
Force	800 N	1 000 N
Control	Stepped (pulse) mode	
Motor	24 V DC	
Opening speed	0,1 m/sec	
Door area	up to 11 sqm	up to 13,5 sqm
Operating temperature range	-20…+55 °C	
Fuses	power supply — 2,5 A	
Radio control	433,92 MHz (max 60 remote controls)*	
Transmission	chain / belt	
Protection class	IP 20	

* may increase with the installation of extremal radio receiver

WARNING!
If there is a wicket, glass or any non-standard section in the door it is recommended to choose an operator as if the door area is about 20% larger.

1.2. OPERATOR PACKAGE

When you receive your Sectional-800PRO-CE / 1000PRO-CE operator, unpack it and check that the operator is not damaged.

If any damages are found, contact the operator supplier.

The operator components included in the standard package are showed below.

Electric operator, 1 pc

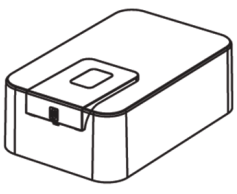

Operating manual, 1 pc



Guide, 1 pc *

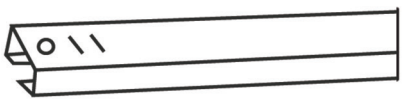

Guide fastening bracket, 1 pc

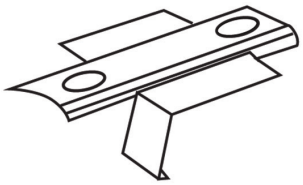

Headroom bracket, 1 pc

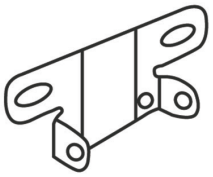

Straight arm fastening bracket, 1 pc

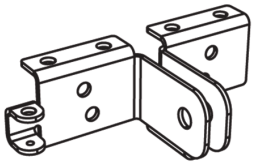

Curved arm, 1 pc



U-shaped bracket, 2 pcs

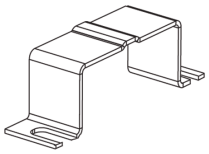

Slotted bushing, 1 pc



Fastening set, 1 pc

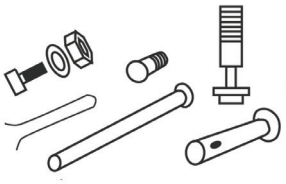

Remote control, 2 pcs

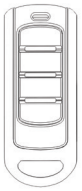

Mechanical stopper, 1 pc

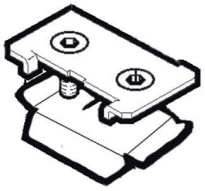

* optional for operators of Sectional series

1.3. TRACK

Guide Model	Guide Length, L	Travel	Opening Height
SK-3000 (chain) / PK-3000 (belt)	3 000 mm	2 800 mm	≤ 2 300 mm
SK-3300 (chain) / PK-3300 (belt)	3 300 mm	3 100 mm	≤ 2 600 mm
PK-3300-3P (belt)*	3 300 mm	3 100 mm	≤ 2 600 mm
SK-3600 (chain) / PK-3600 (belt)	3 600 mm	3 400 mm	≤ 2 800 mm
SK-4200 (chain)	4 200 mm	4 000 mm	≤ 3 400 mm
SK-4600 (chain) / PK-4600 (belt)	4 600 mm	4 400 mm	≤ 3 800 mm

* for DIY 800 PRO-CE operator

2. SAFETY INSTRUCTIONS

IMPORTANT!

You should observe the safety regulations to preserve people's health. You must keep the present manual.

- You should follow all the recommendations of the given manual, as incorrect equipment installation can lead to serious damages.
- The Sectional-800PRO-CE / 1000PRO-CE operator is designed for automation of residential sectional doors. It should be used only for the purpose intended; any other use is prohibited.
- DoorHan is not liable for personal injuries, if the product was used for purposes other than intended.
- Make sure that the door is balanced and functions smoothly before installing the operator.
- The installation is to be carried out according to the standards EN 12453 and EN 12445. For providing the required safety level, these requirements should be observed in non-EU countries.
- You should check if the door conforms to the standards EN 12604 and EN 12605 (see documentation on the doors). For

non-EU countries these measures are to be observed for ensuring the normal safety level.

- The mechanical door assembly units must conform to the provisions of the standards EN 12604 and EN 12605.
- Before installing the operator, make sure the mounting location corresponds to the operator's specifications by its climatic conditions.
- You should not install the equipment in rooms with highly flammable substances or other hazardous media, as this can result in explosion or fire.
- You should use tools indicated in Section «Tools» of the given manual during assembly, installation and adjustment of the operator.
- You should use a stable support when working at height.
- You should use hand and face protection when drilling holes.
- You should use fasteners from the operator package or other suitable fasteners to securely mount the operator.
- You should power off when performing installation, cleaning or maintenance of the operator.
- When mounting the operator on a door with a pass door, it is necessary to install an additional safety device, which prevents the operator activation, when the door is open.
- Make sure, that there will not be trapping of articles between movable and fixed elements of the operator when the door moves.
- You should use additional DoorHan accessories, since the accessories of third party manufacturers can damage the automatic system.
- DoorHan is not liable for unstable work of the automatic system, if you use safety devices and accessories, produced by other manufacturers without securing approval of DoorHan.
- You should not leave the electric motor released. This can lead to uncontrolled movement of the door and, as a result, to its damage.
- You should not use the operator, if it is necessary to repair or to adjust the equipment, since defects during the assembly of the operator or incorrectly installed door can result in injury.
- DoorHan is not liable, if the product is not correctly installed or is damaged during operation.
- Make sure, that there are no foreign objects within the operating range of the electric operator before its start.
- You should not introduce changes, not stated in the given Manual, into the automatic system.
- You should remove the product package and dispose of it. You should not leave the packaging materials within the reach of children.
- You should not allow children to play in the door movement area during the operator operation. All remote control panels and stationary control buttons must be absolutely inaccessible for possible use by children.
- When installing the operator on the door facing public areas, it is required to install safety devices (photocells).
- Repair of the operator can only be carried out by specialized organizations certified by the manufacturer.
- Do not repair the operator by yourself.
- Every six months it is necessary to check the safety of the operator and the balance of the door in accordance with the standards EN 12604 and EN 12605 in the current version. In the event of a malfunction, stop using the door and call the service engineer immediately.
- Record the results of the operator safety test and door balance test in the check log.
- It is allowed to drive in and to pass only when the door does not move and the operator is switched off.
- The contents of the Manual could not serve as a basis for laying claims of any kind.
- The manufacturer reserves the right to introduce modifications into the structure and to improve it without prior notice.

WARNING! RISK OF INJURY!

Have a qualified technician lay the cables 230 V AC. The cables must be laid in protective corrugated tubes. In case of supply cable damage, use the suitable type of the cable.

Cables needed for installation of Sectional-800PRO-CE / 1000PRO-CE operator and accessories (if available):

- Cable 2 × 0,5 mm^2 (photocell transmitter);
- Cabel 4 × 0,5 mm^2 (photocell receiver);
- Cable 3 × 2,5 mm^2 (power supply);
- The cables should be appropriately insulated.

3. OPERATOR UNIT

FIG. 1

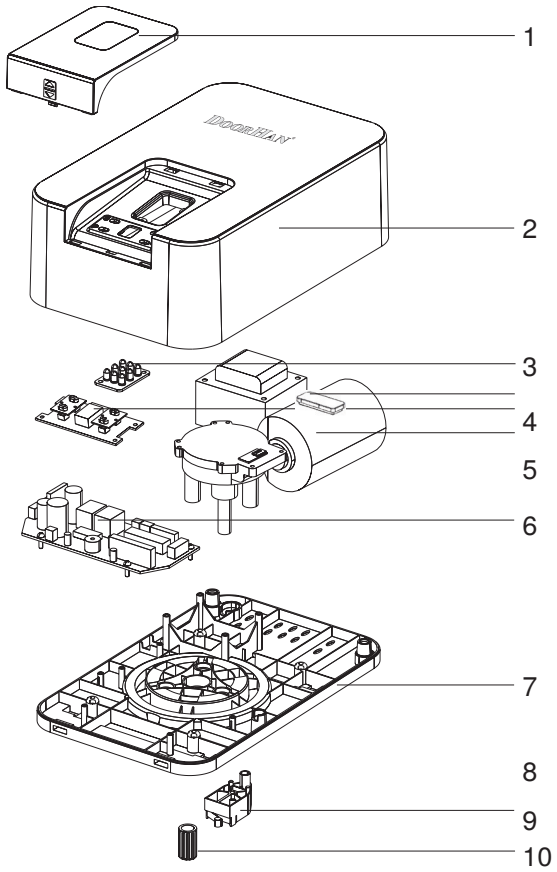

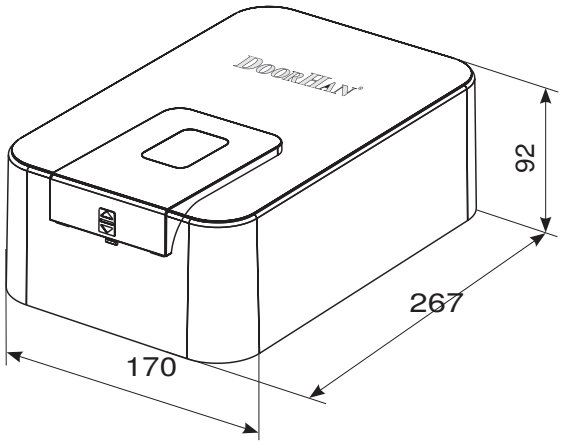

1. Display cover
2. Housing cover
3. LED lamp
4. Display
5. Motor reducer
6. Control board
7. Housing
8. Plug terminals for connection of accessories
9. Reference point micriswitch
10. Splined bushing

4. OPERATOR INSTALLATION

4.1. TOOLS

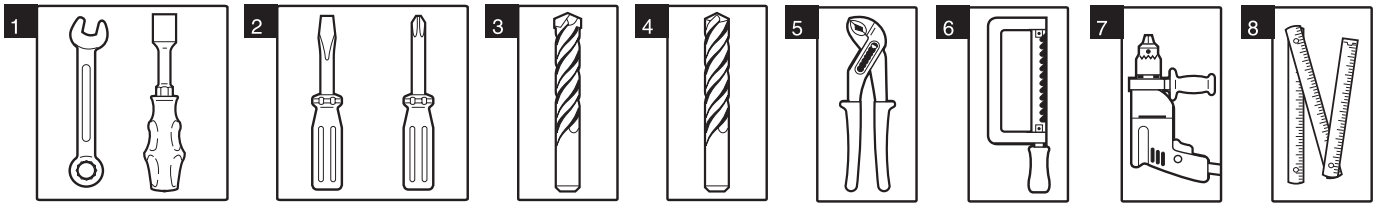

1. Set of spanners
2. Set of slotted and cross screwdrivers
3. Set of drills for metal
4. Set of drills for concrete
5. Pliers
6. Hacksaw for metal
7. Electric drill
8. Tape measure (folding rule)

4.2. REQUIRMENTS TO DOOR INSTALLATION

1. Prior to installation check if the door is properly balanced and moves smoothly when automatically operated.
2. Make sure, that minimum clearance between the ceiling and the top point, when the door is moving, is not less than 45 mm (fig. 1).
3. Check, that the door leaf top roller is in the horizontal part of the guide rail, when the door is completely closed (fig. 2).

FIG. 1

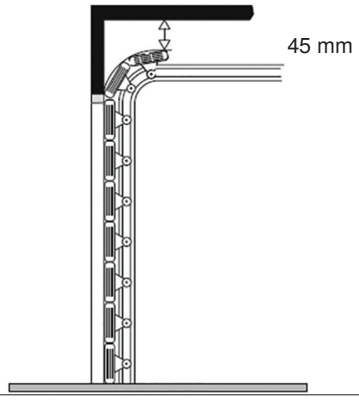

FIG. 2

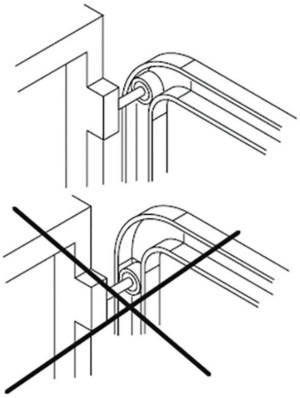

4.3. CONNECTION OF OPERATOR AND GUIDE

1. Put the operator bushing (3) on the shaft (6).
2. Loosely tighten the drive mounting screws (7).
3. Insert the operator unit into the hole on the guide (2).
4. Fasten the operator with U-brackets (1) and tapping screws (7).

FIG. 1

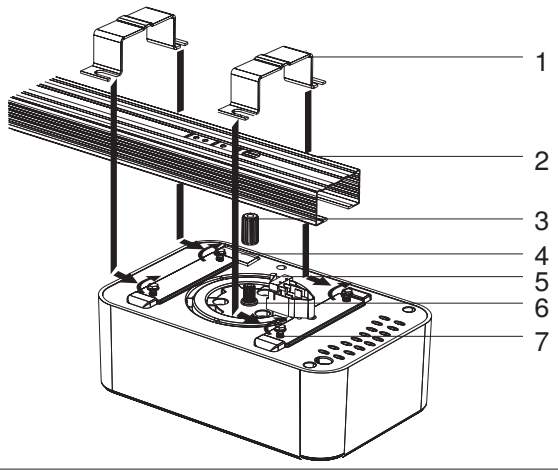

1. U-Bracket
2. Guide
3. Bushing
4. Plug terminals for connection of accessories
5. Micro-switch reference point
6. Motor shaft
7. The drive mounting screws

4.4. TRACK INSTALLATION

The height of operator installation depends on maximum lift of upper edge of the door leaf. After preliminary assembly (see p. 4.3) you can start to install the track:

1. If it is necesssary to shorten the track, do it as described in the Appendix.
2. Mark a vertical line on the headroom corresponding to the horizontal door centre (fig. 1).
3. Place the lintel mounting bracket (1) in such a way that the distance from upper edge of the open door leaf to lower edge of the track equals 10 mm min (fig. 3) and fix it to the lintel using self-tapping screws (2) (fig. 2).
4. Fasten the track (3) and the lintel mounting bracket by means of a track fixation bolt (4) (fig. 4).
5. Install a U-shaped bracket (5) on the track approximately at a distance of 2/3 L and attach it to the ceiling (fig. 5).
6. Install the track mounting brackets (6) on the track approximately at a distance of 1/3 L and attach them to the ceiling (fig. 6).
7. Install a rod-to-leaf mounting bracket (7) in the middle of the upper aluminium profile of the door leaf and fix it using self-tapping screws (8) (fig. 7).
8. Attach a curved arm (9) to the rod mounting bracket and fix it by means of a pin axle (10) (fig. 8). You can choose not to install the curved arm, if 30° <α < 60°.

FIG. 1

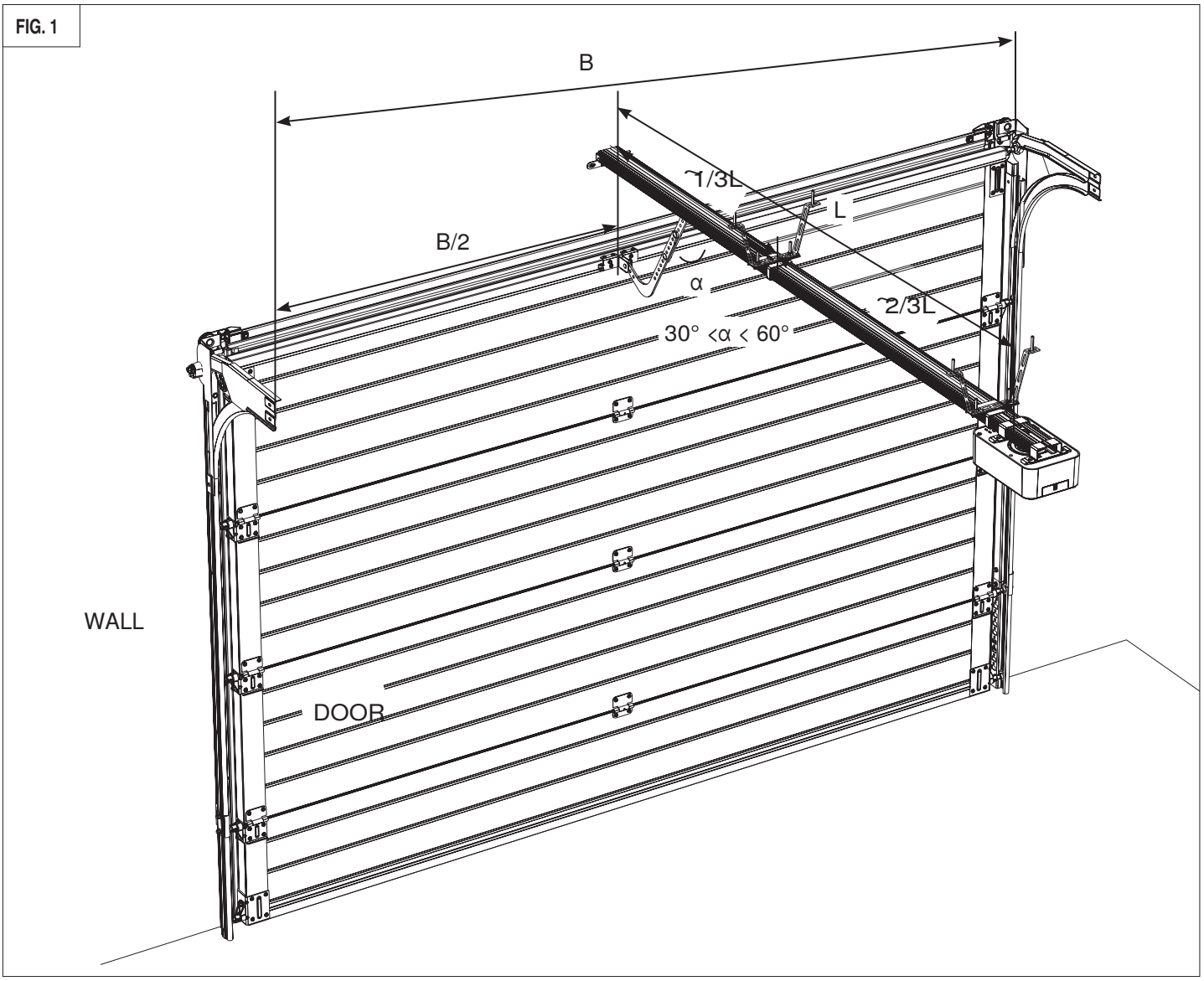

1. Lintel mounting bracket
2. Anchor bolt
3. Track
4. Track fixation bolt
5. U-shaped bracket
6. Track mounting bracket
7. Rod-to-leaf mounting bracket
8. Screw 6× 15
9. Cranked rod
10. Pin axle

FIG. 2

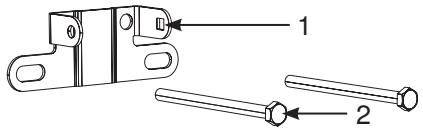

FIG. 3

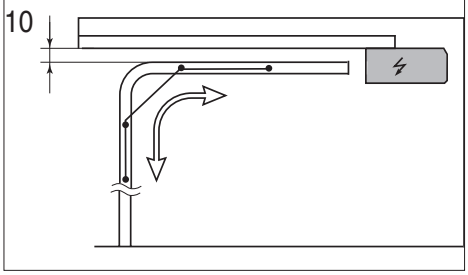

FIG. 4

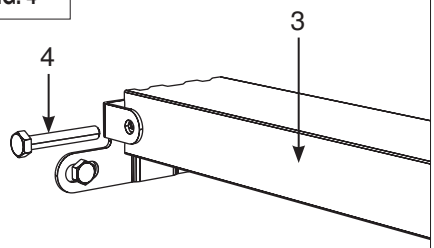

FIG. 5

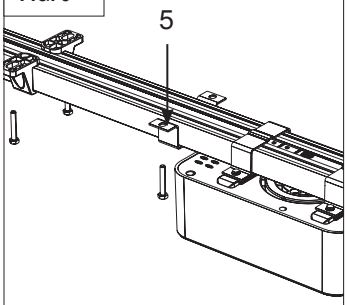

FIG. 6

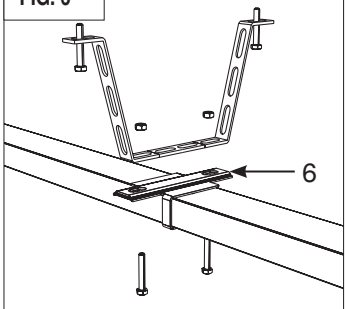

FIG. 7

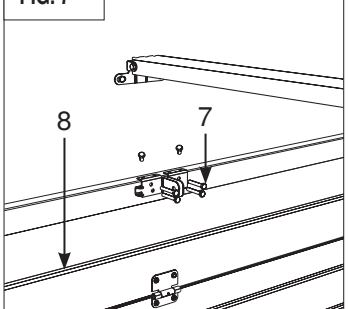

FIG. 8

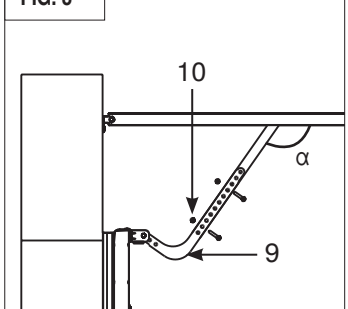

4.5. MECHANICAL STOPPER INSTALATION

FIG. 1

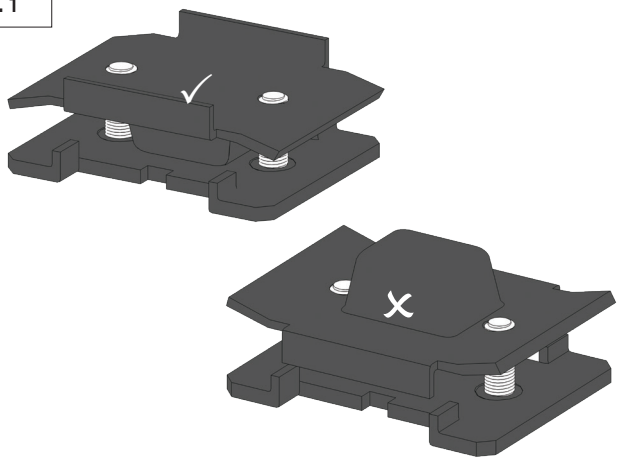

FIG. 2

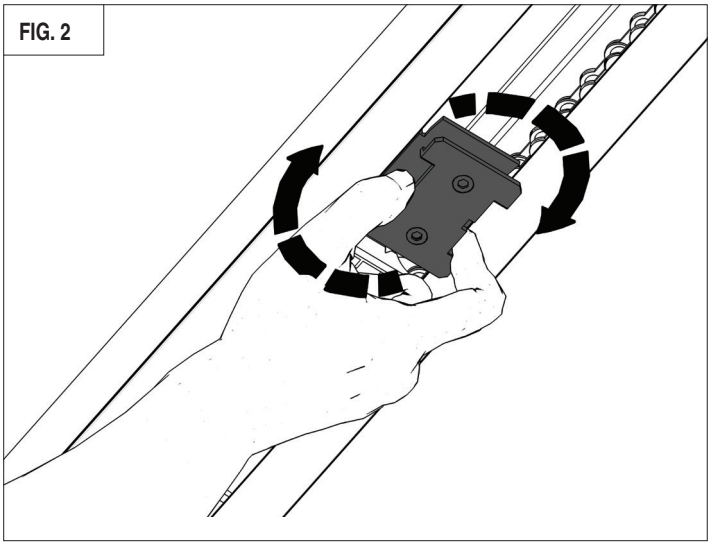

FIG. 3

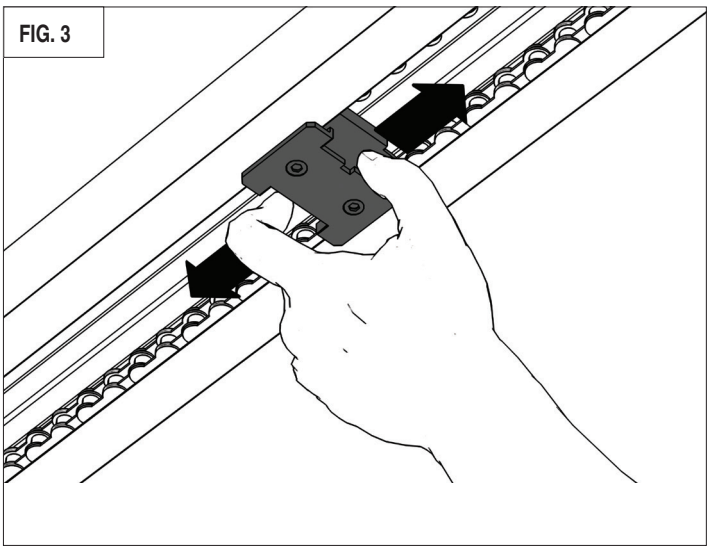

FIG. 4

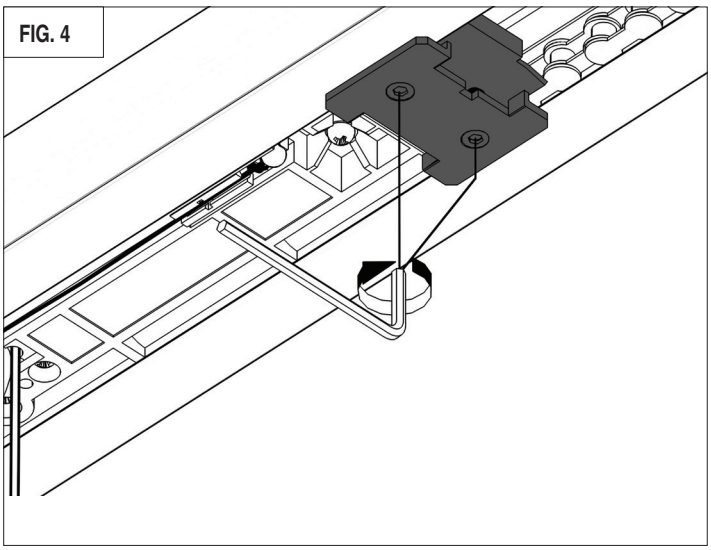

FIG. 5

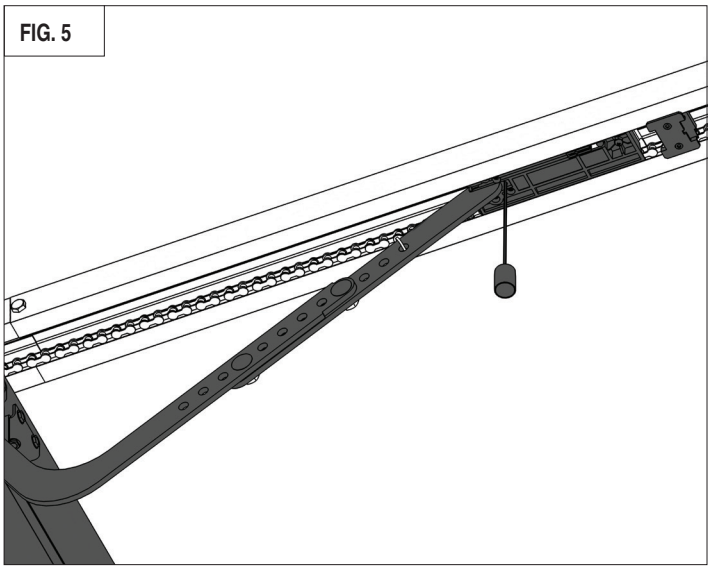

FIG. 6

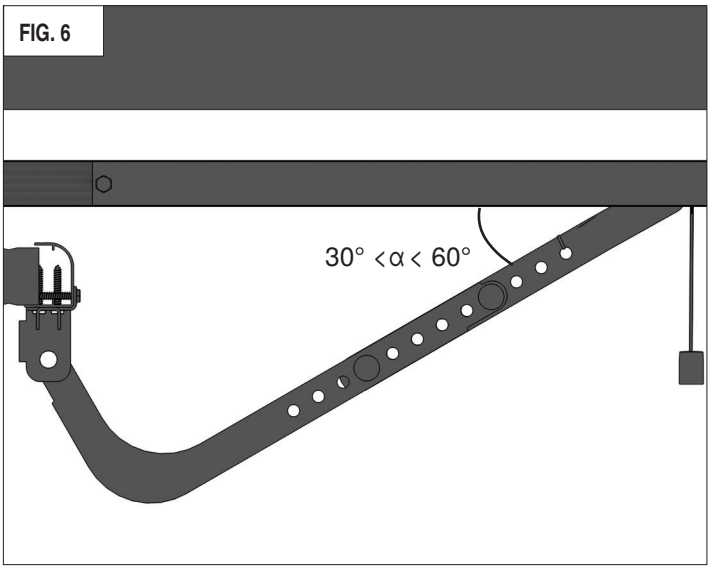

5. ELECTRICAL CONNECTIONS

5.1. CONTROL BLOCK SPECIFICATIONS

Parameters	Value
Power supply	180-240 V, 50 Hz
Power supply of accessories	24 V DC
Maximum current of accessories	200 mA
Operating temperature range	-20…+55°C
Radio control frequency	433.92 MHz
Operating logics	Automatic / semi-automatic
Connectors	Open button / Safety devices / Control light
Lamp turn-on-time	3 min (depending on the setting)
Fuse type	Quick cutoff fuse, 230 V, 2,5 A
External lamp power supply	1 A

5.2. CONTROL BLOCK WIRING DIAGRAM

WARNING!
The cable wires must be protected from contact with any rough or sharp parts. All connections shall be made only when power is off.

FIG. 1

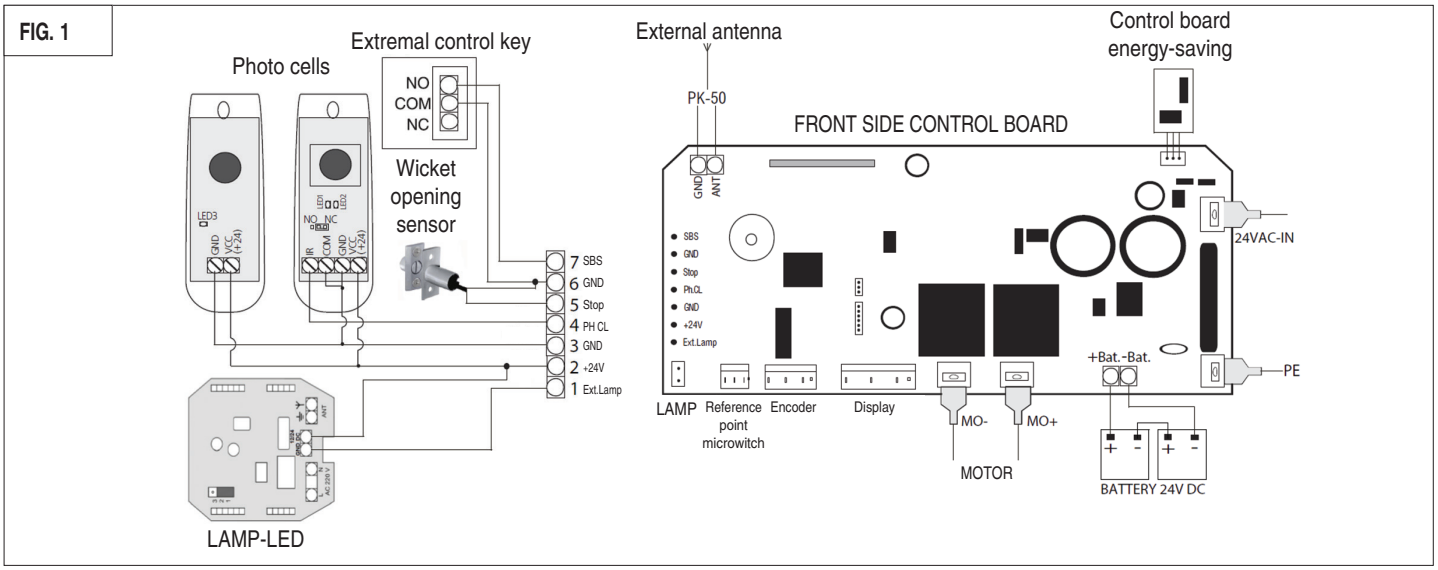

For easy connection of accessories, the operator is equipped with a removable terminal located under the plug (see fig. 2), it allows you to make all the necessary connections without disassembling the operator housing.

FIG. 2

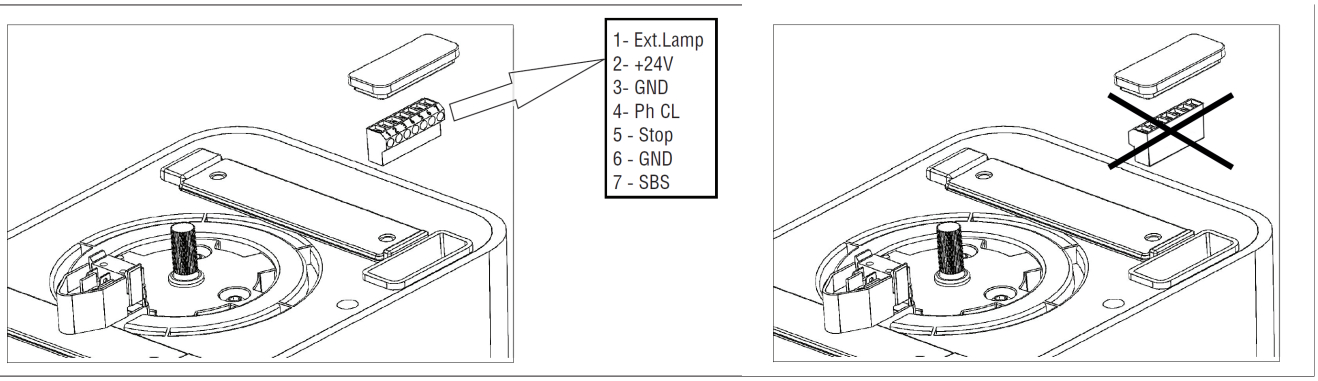

6. OPERATOR PROGRAMMING

6.1. OPERATOR CONTROL BUTTONS

FIG. 1

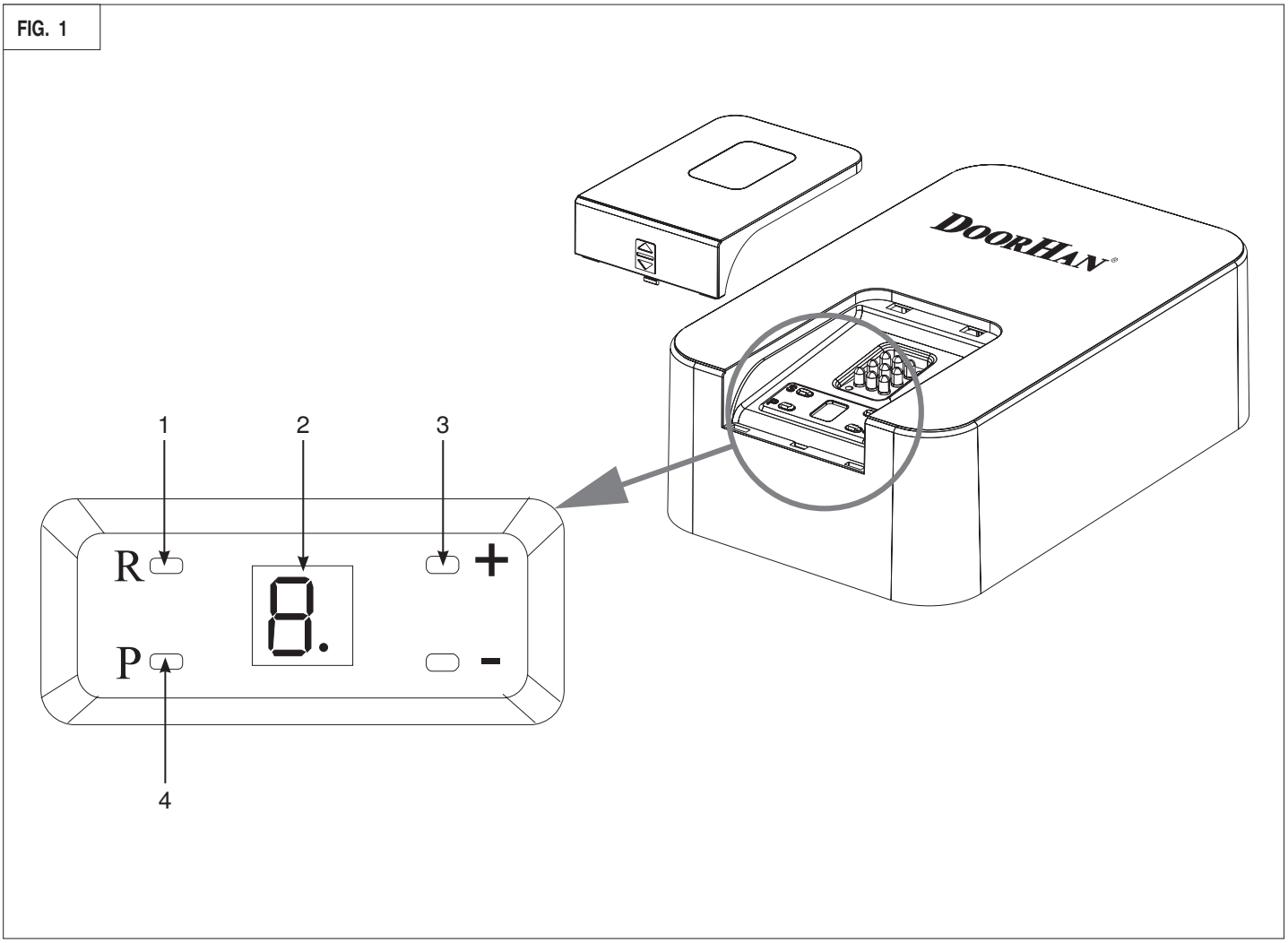

1. Radio code record button — «R»
2. Display
3. Setting selection buttons — «+», «–»
4. Programming button — «P»

6.2. PREPARATION

Block the carriage.
Turn on power, the indicator of the operator will light, sound signal will be heard.
If programming has not been completed, the settings will not be stored.
If there is a mistake in one of the settings, you can turn off power and reprogram.

6.3. BASIC PROGRAMMING

Menu	Function description	Default
1	Door upper position	–
2	Door lower position	–
3	Automatic force adjustment	3
4	Partial opening of the door (ventilation): «Y» – on, «n» – off	n
5	Safety devices: «Y» – on, «n» – off	n
6	Reverse of the carriage when the door is closed	0
7	Automatic door closing: «0» – off, «1» – 30 sec, «2» – 60 sec, … «8» – 240 sec	0
8	Reset to factory settings	r
9	Software version	1.xx

1. Door upper position

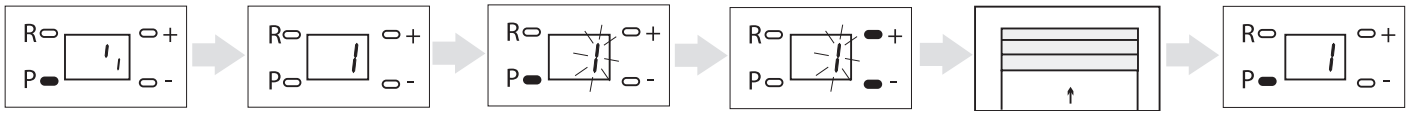

The setting will be stored only when you program the UPPER door position. The upper position shall be programmed before setting the lower door position.

NOTE: If the chosen reference point is «stopper» (see p. 6.4.) than you should install the stopper on the guide rail so that it fixes the upper position of the door.

2. Door lower position

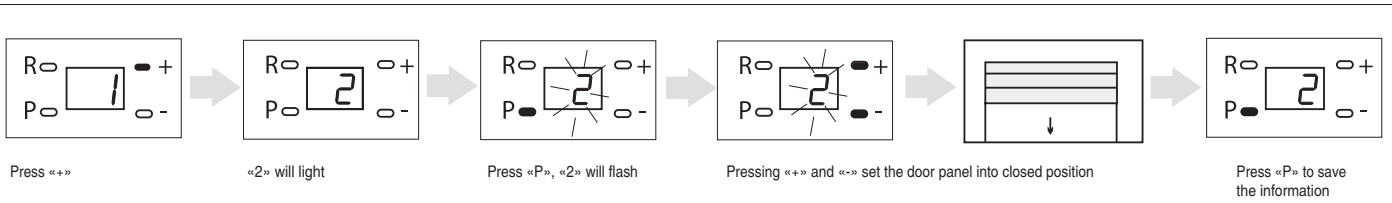

The setting will be stored only when you program the LOWER door position.

NOTE: If the chosen reference point is «micro switch» (see p. 6.4.) and the program does not exit the setting menu after the door has been closed, the microswitch reference point must be checked.

3. Automatic force adjustment

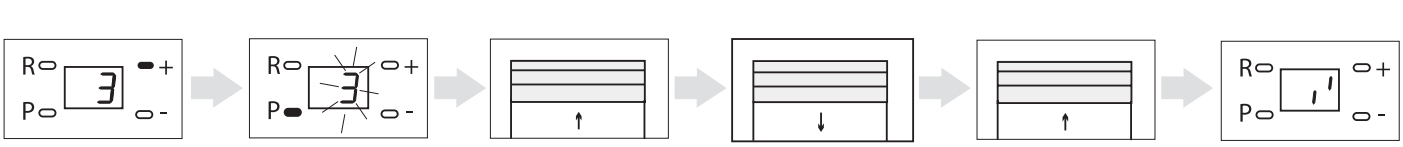

After finishing the automatic force adjustment, a beep will sound, and the program will exit the programming mode automatically. After performing these setups, the programming can be finished; all other parameters have factory settings.

4. Ventilation (Partial opening)

Record remote button to control the partial opening of the door.
Pressing «+» and «-», set the value of the function «Y». Confirm your selection by pressing the «P» button.
After pressing the «P» button, the operator automatically switches to the recording mode of the control button.

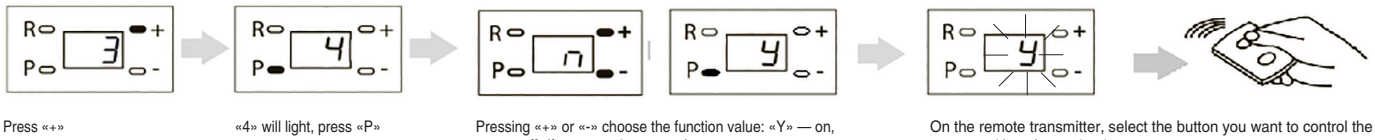

NOTE: In the absence of control commands, the program exits transmitter recording mode automatically in 20 sec. Setting of the door lifting height see Section 6.5, p. 5.

5. Safety devices

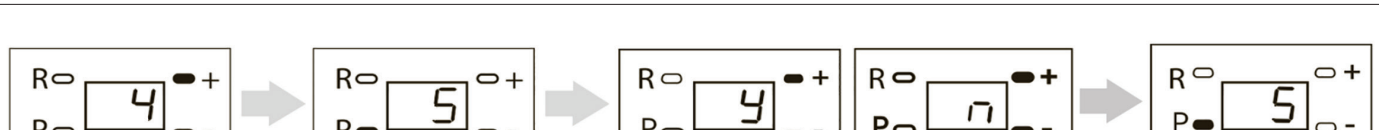

NOTE: Activate this function if you use safety devices.

6. Reverse of the carriage when the door is closed

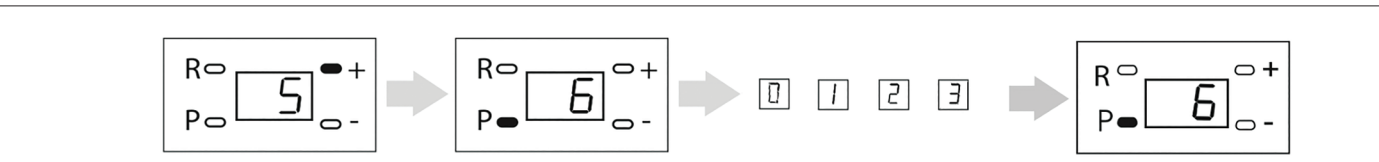

Reverse of the carriage reduces the load on the chain allowing you to effortlessly unhook the door (to switch to the manual mode).

7. Automatic door closing

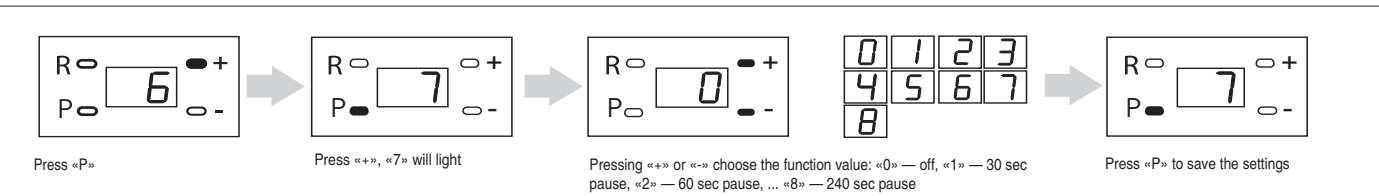

8. Reset to factory settings

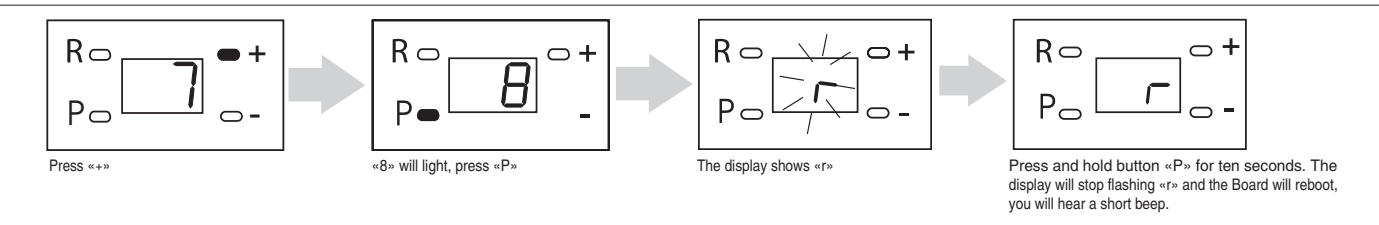

When the parameters are reset to the factory settings, the range of door movement, as well as the remotes recorded in memory are not reset.

9. Software version

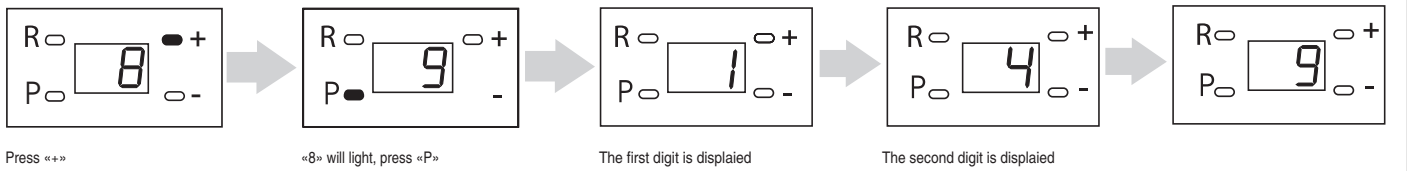

When you enter the ninth menu item, two numbers are displayed sequentially. After the numbers are displayed, the program returns to the main menu.

10. End of programming

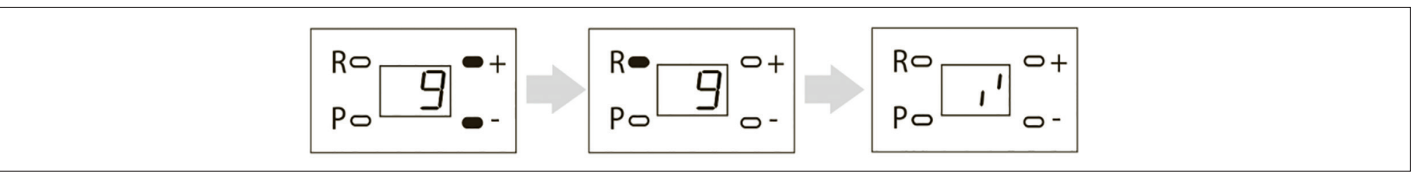

Press «R» to exit programming mode. Programming is over.
NOTE: You can exit any point of the programming.

WARNING!
Exit from the menu items by pressing the «R» button leads to the failure to save the custom setting.

6.4. ADVANCED PROGRAMMING

To enter the advanced programming menu, press and hold the «P» button for 15 seconds. The display will light up «1».

Menu	Function description	Default
1	Distant remote transmitter programming: «Y» – on, «n» – off	**Y**
2	Absolute cycle counter	**0**
3	Prohibition of control commands for closing: «Y» – on, «n» – off	**n**
4	Type of safety device: «0» – external, «1» – built-in	**0**
5	Door opening height during ventilation: «0» – 200 mm, «1» – 1000 mm	**0**
6	Force adjustment: «1» – minimum, «6» – maximum	**3**
7	Reference point type: «1» – microswitch, «2» – stopper.	**1**
8	Contacts control: ext lamp and 24V, 0-automatic, 1-remote control, 2-fan start (ventilation), 3-remote control for 3 sec	**0**
9	Remote control function for internal operator lighting: «Y» – on, «n» – off	**n**
A	Ventilation mode at high humidity	**n**

1. Distant remote transmitter programming

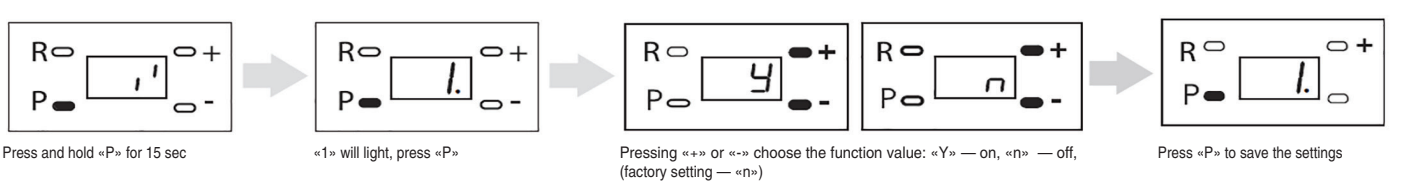

2. Absolute cycle counter

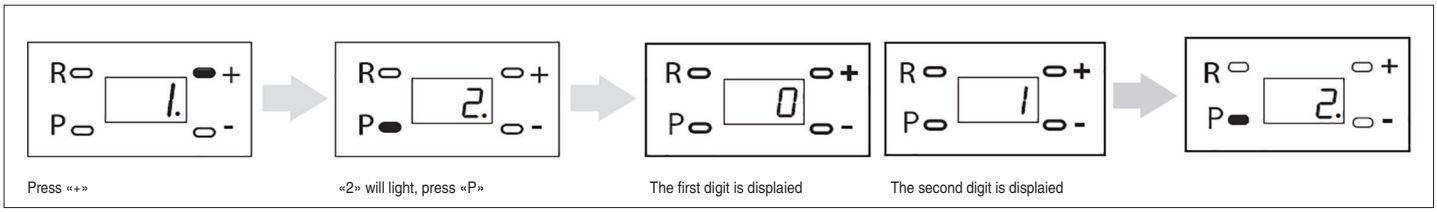

Press «+» | «2» will light, press «P» | The first digit is displaied | The second digit is displaied

After you enter the menu item «2», 4 digits will be displayed in turn: the first digit — tens of thousands, the second digit — thousands, the third digit — hundreds and the fourth digit — tens.

For example: the first digit — «0», the second digit — «1», the third digit — «3» and the fourth digit — «9». Total number of cycles – 1 390.

3. Prohibition of control commands for closing

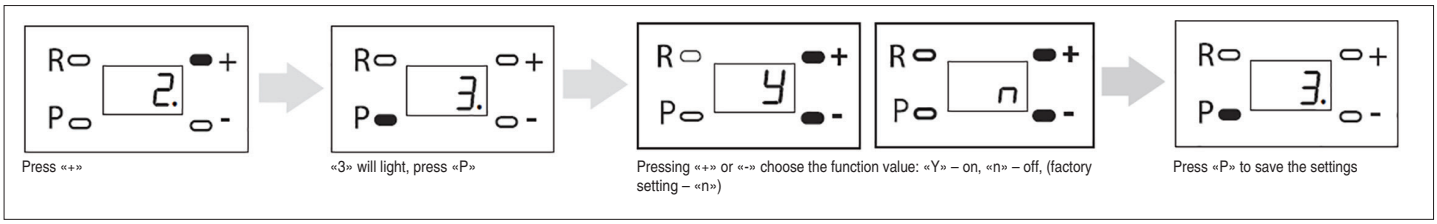

Press «+» | «3» will light, press «P» | Pressing «+» or «-» choose the function value: «Y» – on, «n» – off, (factory setting – «n») | Press «P» to save the settings

NOTE: Door closing is possible only when the «Automatic door closing» function is activated. When the door is closing, a controlling command reverses the door to open again.

4. Type of safety device (photocells)

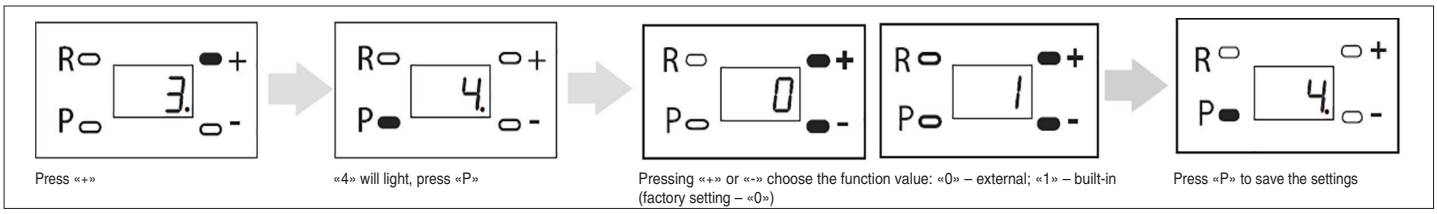

Press «+» | «4» will light, press «P» | Pressing «+» or «-» choose the function value: «0» – external; «1» – built-in (factory setting – «0») | Press «P» to save the settings

5. Door opening height during ventilation

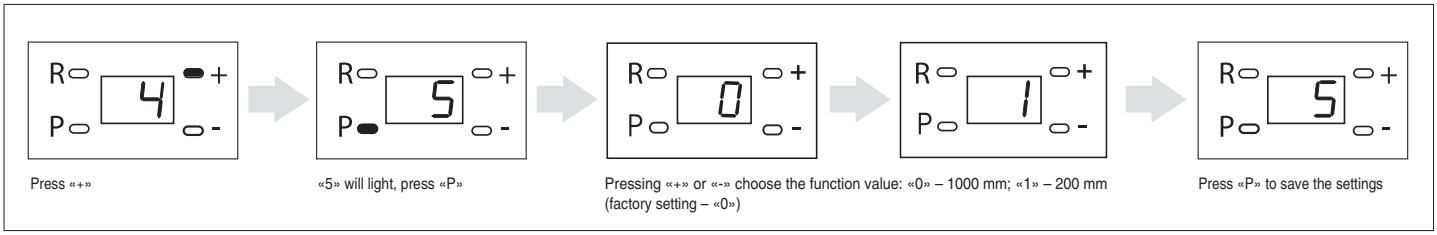

Press «+» | «5» will light, press «P» | Pressing «+» or «-» choose the function value: «0» – 1000 mm; «1» – 200 mm (factory setting – «0») | Press «P» to save the settings

To control the «partial opening» function, it is necessary to select the number of the remote control button in the fourth menu item (see section 6.3), which will subsequently activate this function. When you press the selected button on the remote control, the door will open to the set position (see section 6.4, p. 5).

NOTE: The selected button have to be saved in the receiver memory.

6. Force adjustment

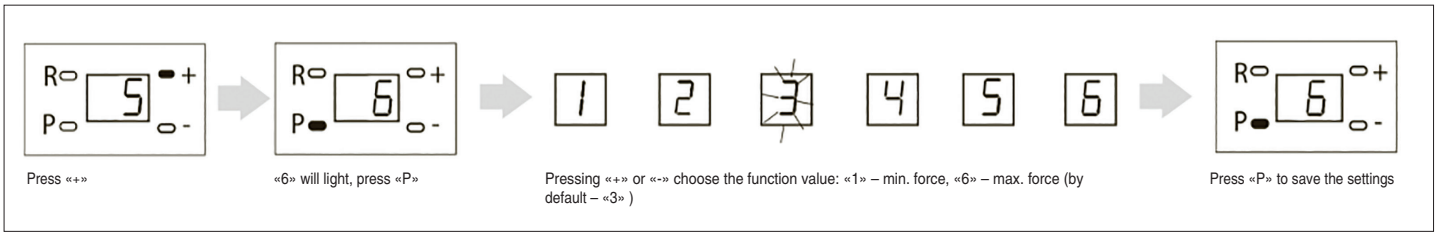

Press «+» | «6» will light, press «P» | Pressing «+» or «-» choose the function value: «1» – min. force, «6» – max. force (by default – «3») | Press «P» to save the settings

7. Type of reference point

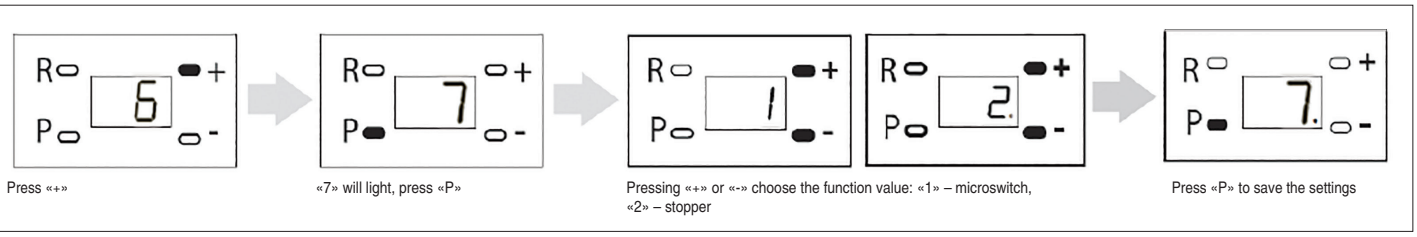

NOTE: When switching to another function, you must repeat steps 1-3 of the basic programming.

8. Remote control function for external lighting

Recording the remote transmitter button to control additional lighting.

Pressing «+» or «-» choose the function value: «1 or 2,3» and confirm by pressing «P». After pressing the «P» button, the operator automatically switches to the recording mode of the control button.

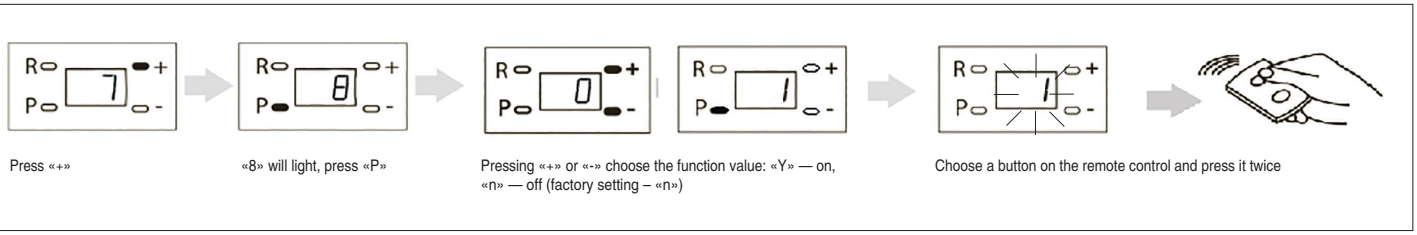

NOTE: In the absence of control commands, the program exits transmitter recording mode automatically in 20 sec. The lighting is on for an hour or until it is switched off by a second signal. Maximum permissible load for Ext.Lamp — 1 A.

9. Remote control function for internal operator lighting

Recording the remote transmitter button to control internal operator lighting.

Pressing «+» or «-» choose the function value: «Y» and confirm by pressing «P». After pressing the «P» button, the operator automatically switches to the recording mode of the control button.

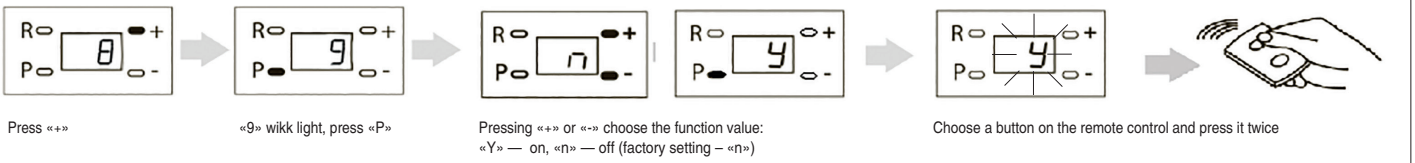

NOTE: In the absence of control commands, the program exits transmitter recording mode automatically in 20 sec. The lighting is on for an hour or until it is switched off by a second signal.

10. Ventilation mode at high humidity

If the air humidity level reaches the set value when the door is closed, the door will partially open (ventilation mode).

If during ventilation the level of air humidity falls below the set value, than the door closes. If the level of air humidity rises above the set value the door closes too. Next ventilation will start not earlier than in 30 minutes.

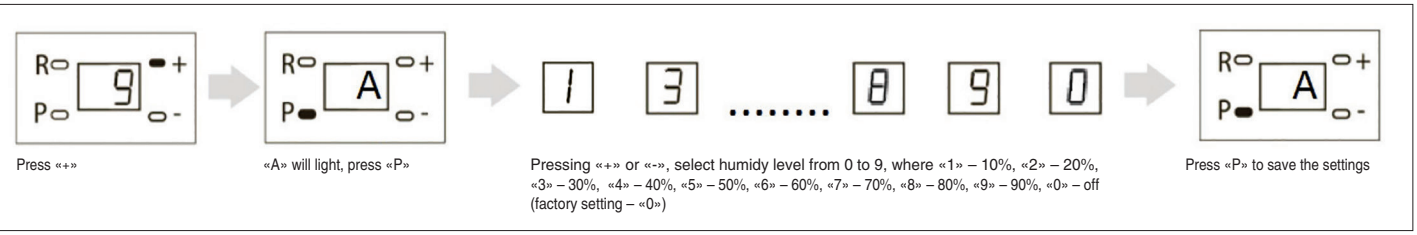

NOTE: If you press and hold the «P» button when the «A» item of the menu is activated, the display will show humidity level in the room.

6.4. REMOTE CONTROL PROGRAMMING

1. Removal of all remote controls from the receiver memory

Press and hold the «R» button for about 20 seconds (during this time you will hear 2 short beeps), then a long sound signal will be heard, and the program will switch to the operating mode.

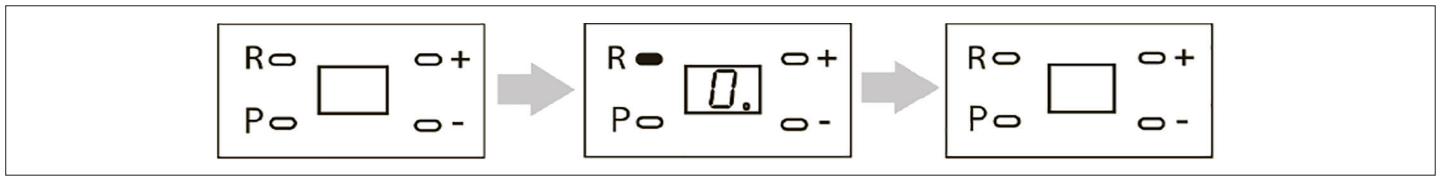

2. Recording of a remote control into receiver

1. Press and hold the «R» button, until the indicator «0» appears on the display. Release the button.
2. Select the button on the remote control, using which you will later operate the unit, and press it twice. A short sound signal will be generated, meaning successful recording of the panel into the receiver.
3. Repeat the code recording procedure for each panel to record several panels. Thus, it is possible to record up to 60 panels into the receiver memory.
4. All the remote controls will be recording gradually.

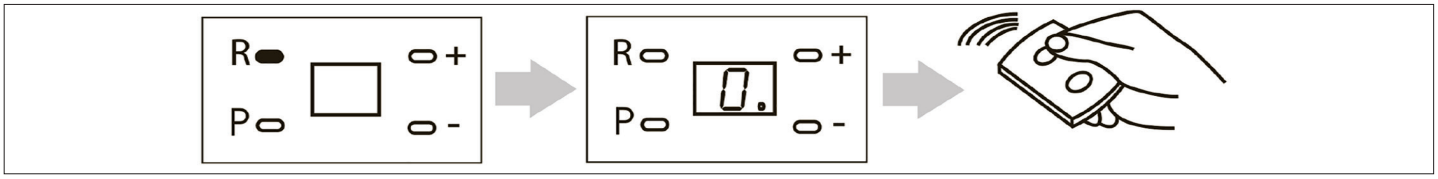

NOTE:

- When the receiver memory is full, three long beeps will sound.
- In the absence of control commands, the exit from the recording mode occurs automatically in 10 seconds.
- When the control unit is disconnected from the network, the programmed data is stored in the memory.

3. Removal of one remote control from the receiver memory

To remove one particular remote control, you must press and hold the «R» button and release it after the second beep, «0» indicator on the display will start flashing. Then double press the recorded button of remote control you want to delete from the receiver memory. 3 short beeps will sound, indicating the remote control is successfully deleted from the receiver memory. To delete several remote controls repeat the deletion step for each new remote.

NOTE: If there are no commands from the panel, the program will exit removal mode automatically in 5 seconds.

4. Remote programming of controls

Steps 1–4 should be performed within five seconds interval being in close proximity to the operator:

1. Press and hold down button «2» of the programmed remote control panel.
2. Press and hold down button «1» without releasing the pressed button «2».
3. Release the pressed buttons.
4. Press the programmed button of the remote control.
5. Select the button on the new remote control, using which you will later operate the unit, and press it twice. A short beep will sound.

NOTE: All four control buttons can be programmed for the operator.

5. Marking of the DOORHAN remote controls' buttons



7. MANUAL OPENING

Opening by means of integrated carriage releasing device

FIG. 1. Emergency release

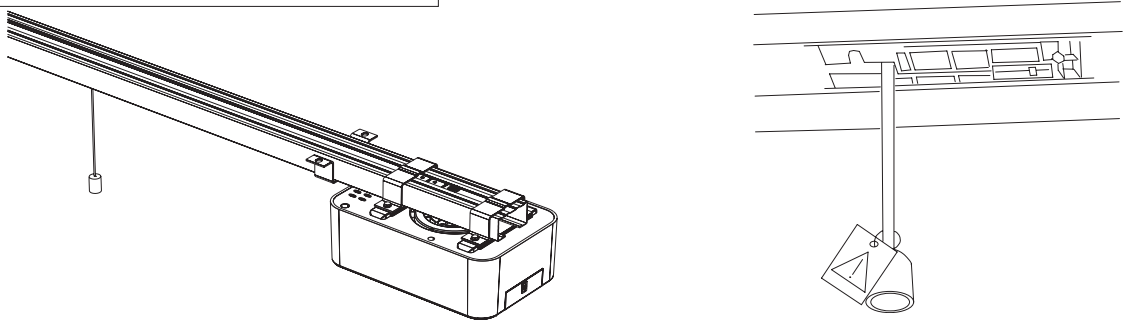

FIG. 2. Manual contol

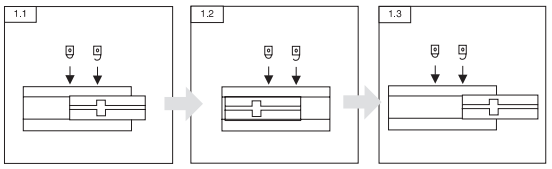

FIG. 3. Automatic control

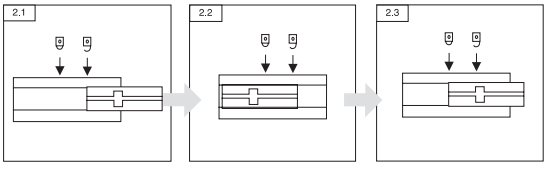

POWER OUTAGES

In the event of main power failure, the operator can be switched to manual control. To do this, pull down the releasing device cord. The carriage should withdraw from the engagement, and after that the door can be operated manually (fig. 2).

POWER RECOVERY

When main power is restored, the operator is to be set to automatic control. To do this, move the carriage into the locked position by pulling the releasing device cord to youself (fig. 3). After this, trigger a signal from the remote control or control button, wait till the carriage engages with the chain (belt).

IMPORTANT!

When the carriage is blocked, the door will move automatically only after the carriage engages with the chain support.

8. MAINTENANCE

It is necessary to carry out regular maintenance in accordance with applicable regulations and legislation, specified in this manual, in the manuals of other devices involved, in compliance with safety measures, involving qualified personnel. The operator requires scheduled maintenance once a year or 5 000 cycles after the last maintenance.

- Perform the operator test in accordance with the instructions in the «Safety Instructions» section of this manual.
- Disconnect the operator from the power supply (if the backup battery is connected — disconnect it).
- Check the wear of the elements of the operator unit (chain, carriage, sprocket, door components, etc.), paying attention to the oxidation of components. Replace all worn parts and assemblies.
- Verify the the door end positions. If necessary, adjust them.
- Clean the outer surfaces of the operator, safety devices, electromechanical and electromagnetic locks (when used). Clean with a soft, damp cloth. Do not use for cleaning: water jets, high pressure cleaners, acids or alkalis.
- Every month check if the safety and protective devices are in good working condition. Should any failures be detected ask qualified personnel for troubleshooting.
- Average product life is 10 years or 50 000 cycles
- The service life and number of cycles are approximate. They have been statistically determined for typical operating conditions and are not guaranteed on a case-by-case basis. These characteristics refer to the period of operation of the equipment during which there is no need for special maintenance.
- Each automatic entrance group has a number of technical characteristics (friction, balancing, environmental conditions)

that can significantly affect the service life and quality of work of the whole entrance group or its component parts (including automation).

9. TROUBLESHOOTING

Symptom	Possible reason	Possible solution
Operator does not run	No power supply / Blown fuse	Turn power on / Change the fuse
Remote control does not run	Remote control isn't recorded in the receiver memory / Remote control battery has discharged	Record the remote control / Change the battery
Remote control actuation distance is too small	Remote control battery has discharged / Interfering signal	Change the battery /Remove the interfering signal
Chain moves but the door does not move	Carriage is disengaged / Carriage isn't hooked with chain support	Engage the carriage / Hook it with chain support
Noise when operator runs	Chain is not properly lubricated	Lubricate the chain
Noise during chain operation, sagging chain	Long operation of non-lubricated chain	Tighten the chain using the chain-tensioning screw, lubricate the chain
The door has suddenly stopped, «F» indicator is on	The door ran into an obstacle	Remove the obstacle / Check door mechanics / Change pulse sensor
When giving a controlling command there are two beeps, the door does not move, the display blinks «P»	Safety devices were actuated	Free the opening from obstacles / Check the operation of safety devices
The door has suddenly stopped, «C» indicator is on	Insufficient supply voltage	Verify the power supply corresponds to the declared characteristics
The program does not exit the setting of the door lower position	The reference point fails during programming	Eliminate the cause of the reference point failure
The door has suddenly stopped, «E» indicator is on	Encoder signal is missing	Contact the service center
When giving a controlling command there are two beeps, the door does not move, the display blinks «S»	Open wicket sensor was actuated	If there is no open wicket sensor, check for a jumper in the GND — STOP terminal

NOTE: In the process of door movement «L» indicator is on meaning the door synchronization microswitch (reference point microswitch) was actuated. This indicator does not mean the operator failed.

APPENDIX

To cut the track:

1. Unpack the track and check it. Make sure it is not damaged. If you have found any damage, contact your vendor.
2. Disassemble the chain tension mechanism (fig. 1).
3. Remove the chain with the carriage mechanism (fig. 2).
4. Disassemble the carriage into two parts (fig. 3).
5. Cut the track and the chain as necessary (fig. 4).
6. After that assemble the track in the reverse order.

FIG. 1.

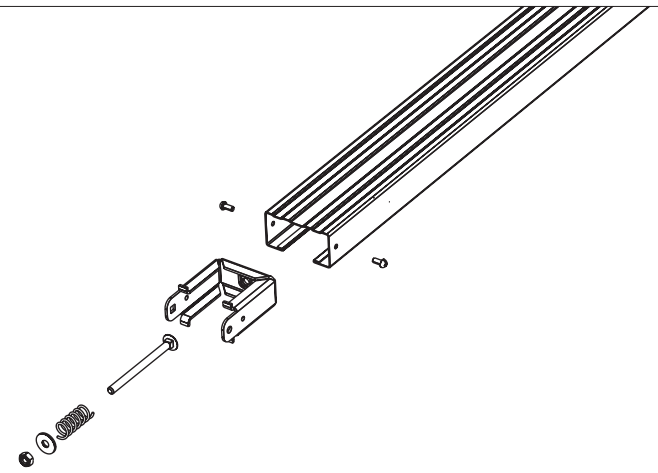

FIG. 2.

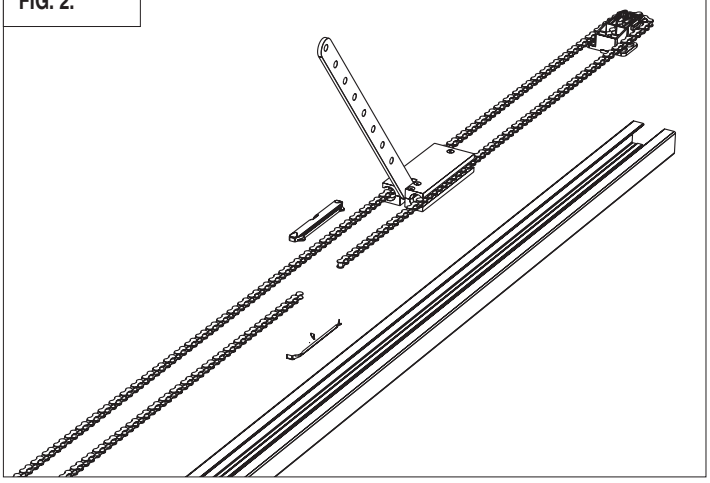

FIG. 3.

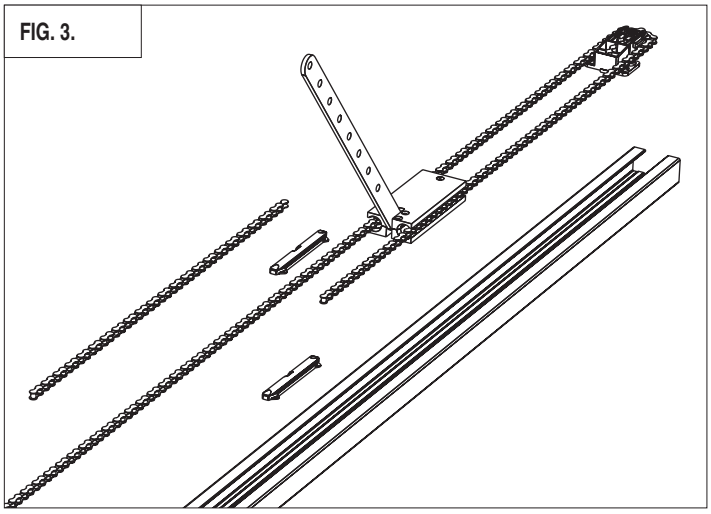

FIG. 4.

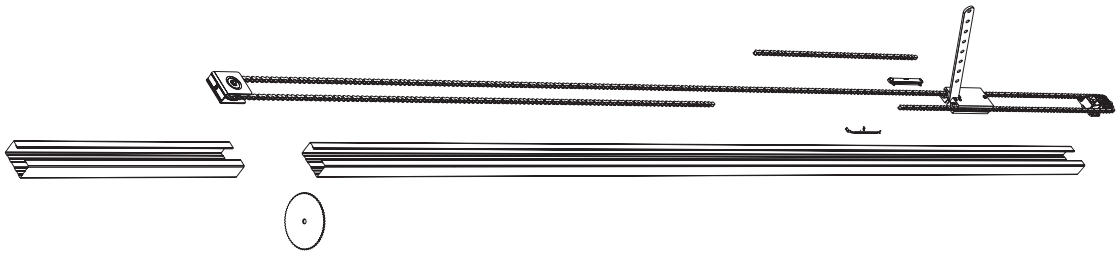

DoorHan®

We thank you for purchasing the DoorHan product. We hope that you will be satisfied with its quality.

For acquisition, distribution and maintenance please contact your local DoorHan dealer or the central office at:

Poland,
62-004 Czerwonak, ul. Gdyńska 32
Tel.: +48 61 881 97 10
E-mail: serwis@doorhan.pl
www.doorhan.pl